Sections of enclosing structures and partitions

M 1:10

Roof

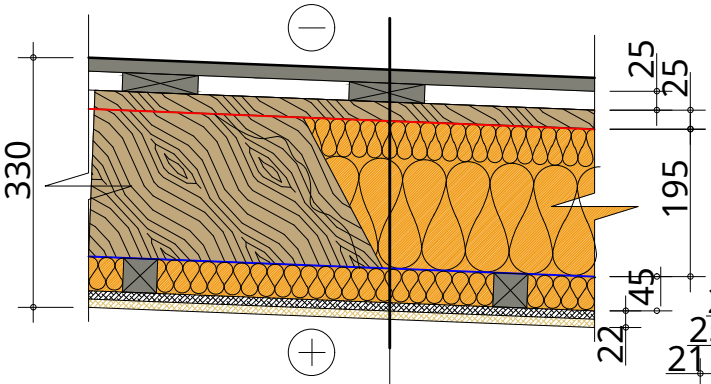

From the outside	U=0.15 W/(m2K)
Roofing Ruukki rolled profile	
Cross section 25x100mm s.300mm	
Lathing 25x50mm	
Diffusion membrane	
Wooden rafters C24 45x195m S. insulation mineral wool λd=0.036w/mk b.150+50mm	
Vapor barrier 200mk	
Crossbar 45x45mm s.500mm S. insulation mineral wool λd=0.036w/mk b.50mm	
OSB-3 b.12mm	
Plasterboard b.12.5mm	

Exterior wall

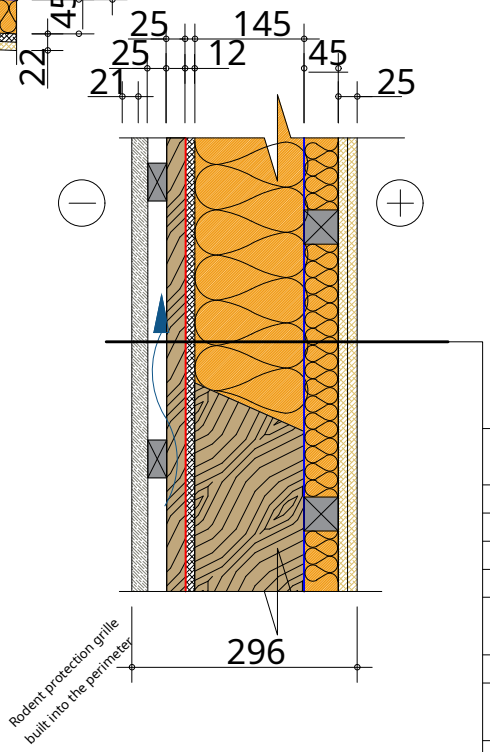

From the outside	U=0.19 W/(m2K)
Facade finishing wooden boards 21x145mm (vertical)	
Insect screen	
Horizontal batten 25x50mm	
Vertical batten 25x50mm	
Windproof insulation	
OSB-3 b.12mm	
Wall wooden frame C24 45x145mm S. insulated mineral wool λd=0.036w/mk b.150mm	
Vapor barrier 200mk	
Horizontal batten 45x45mm s.610mm S. insulation mineral wool λd=0.036w/mk b.50mm	
Plasterboard b.12.5mm	
Plasterboard b.12.5mm	

Floor

From above	U=0.17 W/(m2K)
Floor finishing	
OSB-3 b.22mm	
Vapor barrier 200mk	
Wooden beams C24 45x220m S. insulation mineral wool λd=0.036w/mk b.150+75mm	
Windproof insulation	
Wooden lathing 25x100mm (septiced)	
Moisture-resistant plywood or cement fiber board b.9mm	

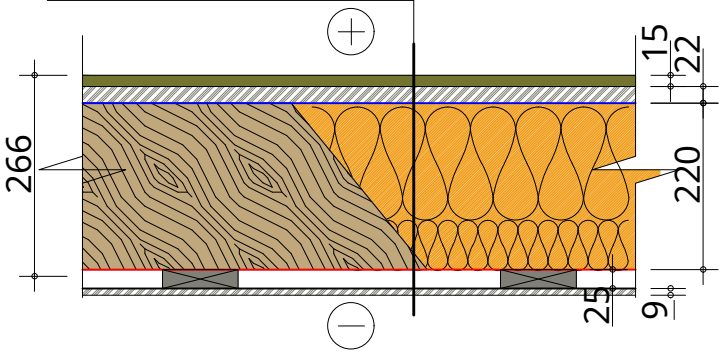

Partition

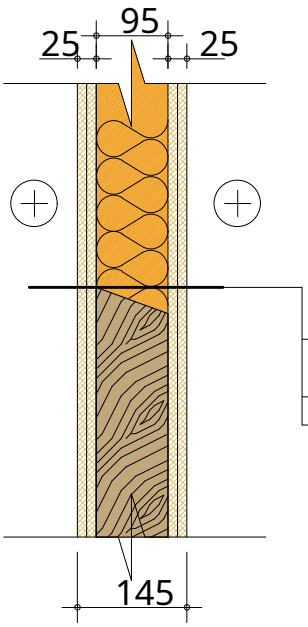

Plasterboard in 2 layers 12.5+12.5mm
Wall timber frame C24 45x95mm Acoustic mineral wool b.100mm
Plasterboard in 2 layers 12.5+12.5mm